WASHER

Repair Parts List

MODEL NUMBER

MAF18PC2

When requesting service or ordering parts, always provide the following information:

- **Product Type**
- **Part Number**
- **Model Number**
- **Part Description**

MAYTAG®

©2005 Maytag Services

Section: MAIN EXPLODED VIEW - COMPUTER MODELS

Model: MAF18PC2

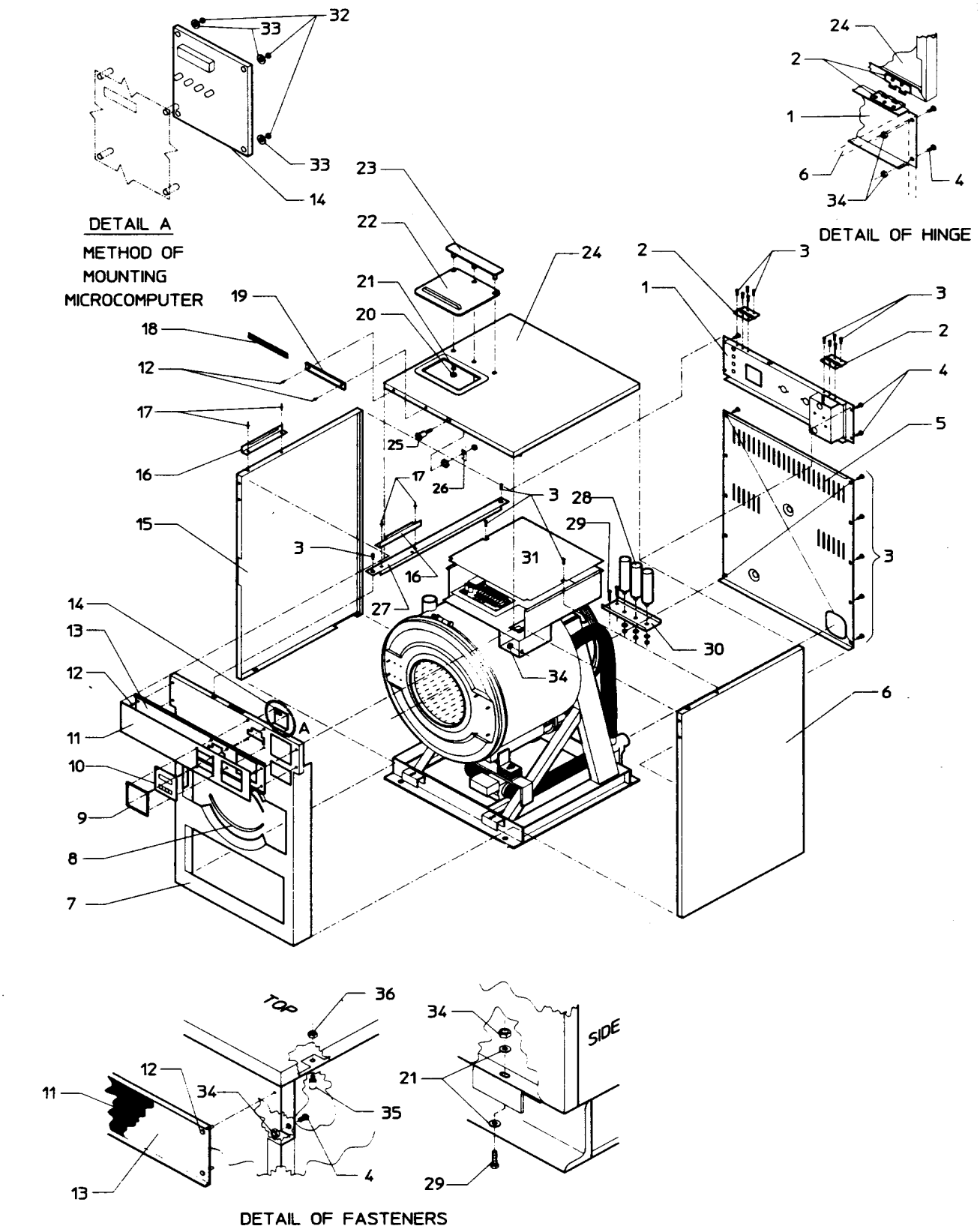

721179

Section: MAIN EXPLODED VIEW - COMPUTER MODE

No.		Part No.	Description	Series Qty
1		24001169	PANEL KIT, VALVE	1
2		24001676	HINGE, TOP COVER	2
2		24001300	HINGE (TAKE APART)	2
3		24001301	SCREW (8-18 X 3/8")	26
4		24001323	SCREW (1/4-20 X 1/2")	8
5		24001400	KIT, PANEL (REAR)	1
6		24001162	PANEL KIT, SIDE (RT.)18	1
7		24001701	PANEL, FRONT (INR)	1
8		24001550	TRIM, PANEL (INNER FRONT) Note: TRIM, PANEL (INR FRT)	2
9	N	24001203	TRIM, KEYPAD (CPTR GREY)	1
10		24001112	SWITCH, MEMBRANE	1
11	N	24001704	DECAL	1
12		24001533	RIVET, POP S.S. (1/8" X 1/4")	6
13	N	24001050	PANEL, CONTROL	1
-		24002036	DECAL, CONTROL PANEL (MAF-MC)	1
14		24001010	BOARD, COIN COMPUTER	1
14		24001709	BOARD, COMPUTER (OPL RED LED)	1
15	N	24001155	PANEL KIT, SIDE (LT.)18	1
16		24001539	BRACKET, SOAP DISPENSER	2
17		24001540	RIVET, BLIND S.S. (1/8 X 5/16)	1
18	N	24001670	DECAL (MAYTAG)	1
19		24001671	NAMEPLATE	1
20		24001510	NUT, S.S. (1/4"-20)	3
21		24001295	LOCKWASHER	3
22		24001219	COVER, SOAP DSPNSR	1
23		24001542	CLAMP, SOAP DISPENSER	1
24		24001168	COVER ASSY KIT, TOP	1
25		24001220	LOCK, TOP COVER	1
26		24001221	LATCH, TOP COVER	1
27		24001695	BRACE, TOP	1
28		24001698	CAPACITOR (130 MFD)	1
28		24001236	CAPACITOR (100MF)	2
29		24001303	SCREW (1/4-20 X 1-1/4")	8
30		24001692	BRACKET, CAPACITOR	1
31		24001545	COVER, ELECTRICAL MODULE	1
32		24001417	NUT, BRASS (#6-32)	4
33		24001415	WASHER, S.S. (#6 EXT. TOOTH)	4
34		24001305	NUT, FIBERLOCK (1/4)	17
35		24001546	STUD, S.S. (6/32" X 1/4")	1
36		24001425	NUT, FIBERLOCK, PLTD (6-32)	1
-		24001675	RESISTOR (12K OHMS 5 WATT)	1

*Color Code (-)=Not Shown #=Series, Serial Prefix or Run No., N=Not Available

Section: DOOR & RELATED PARTS

Model: MAF18PC2

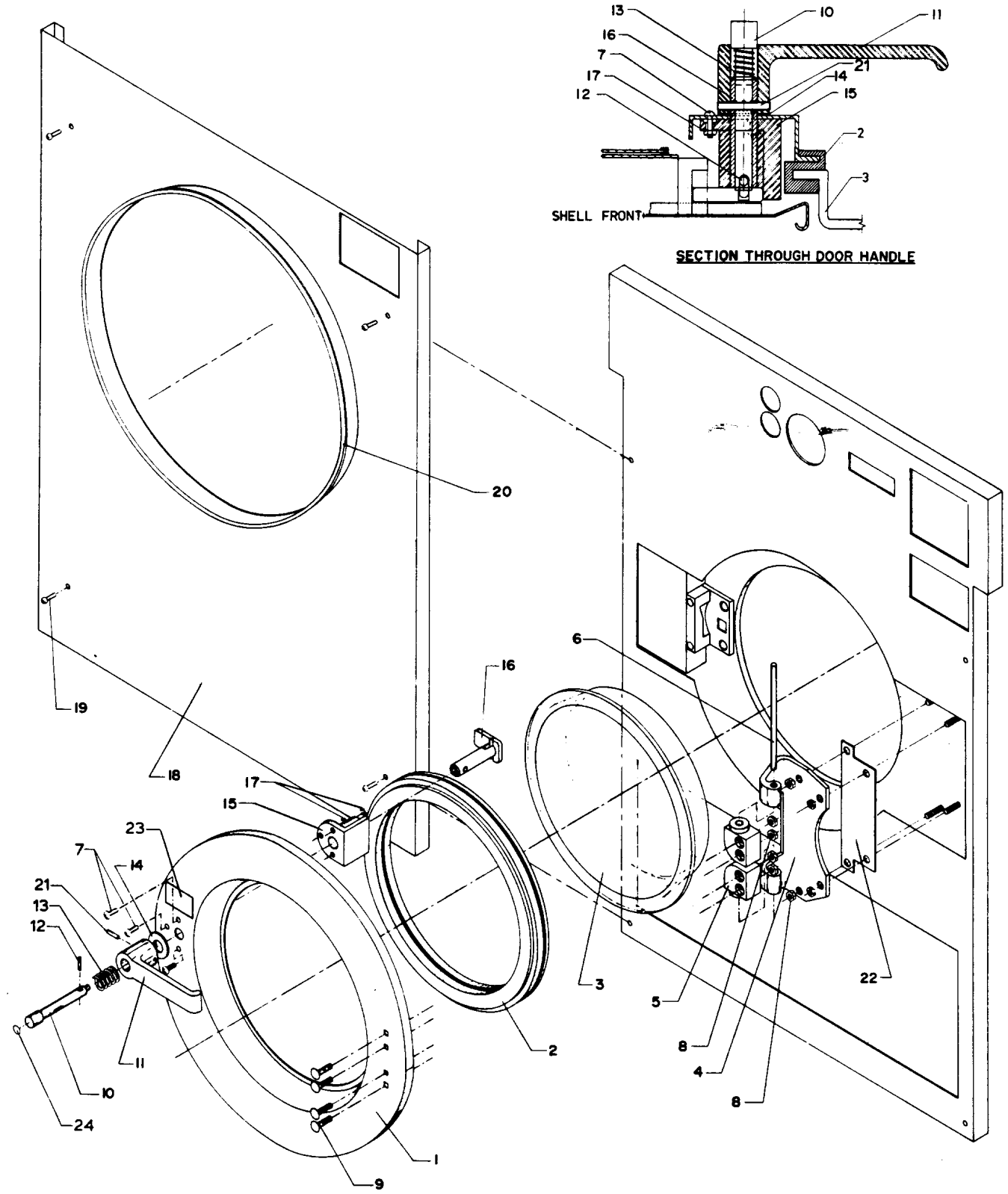

721137

Section: DOOR & RELATED PARTS

No.	Part No.	Description	Series Qty
1	24001718	DOOR	1
-	24001638	DOOR ASSY. (COIN)	1
2	24001075	GASKET, DOOR	1
3	24001098	GLASS, DOOR	1
4	24001333	HINGE, DOOR	1
5	24001334	MOUNT, DOOR	2
6	------	NOT REQUIRED PART OR SEE NOTE Note: PART NUMBER NOT AVAILABLE	0
7	24001341	SCREW (8-32X 5/8")	3
8	24001305	NUT, FIBERLOCK (1/4)	8
9	24001467	SCREW, S.S. (1/4 - 20 X 7/8)	4
10	24001103	ROD, PUSH BUTTON	1
11	24001336	HANDLE, DOOR	1
12	24001721	PIN, SPRING	1
13	24001338	SPRING, DOOR LOCK	1
14	24001310	SCREW (5/16-18 X 5/8")	1
15	24001340	SPACER, DOOR HANDLE	1
16	24001343	ARM, LATCH	1
17	24001342	NUT, LOCK (8-32)	3
18	24001728	OUTER PANEL KIT (COIN ALM)	1
18 N	24001145	PANEL KIT, FRONT OPL	1
18	24001133	PANEL KIT, FRONT COIN	1
19	24001474	SCREW, S.S. (#8-32 X 3/8 PL)	4
20	24001722	TRIM, OUTER FRONT PANEL	1
21	24001827	PIN, SPRING (STLS)	1
23	24001462	DECAL, PUSH BUTTON RED	1
24	24001407	DECAL Note: DECAL, RED DOT	1

*Color Code (-)=Not Shown #=Series, Serial Prefix or Run No., N=Not Available

Section: DOOR SAFETY INTERLOCK - COIN MODELS

Model: MAF18PC2

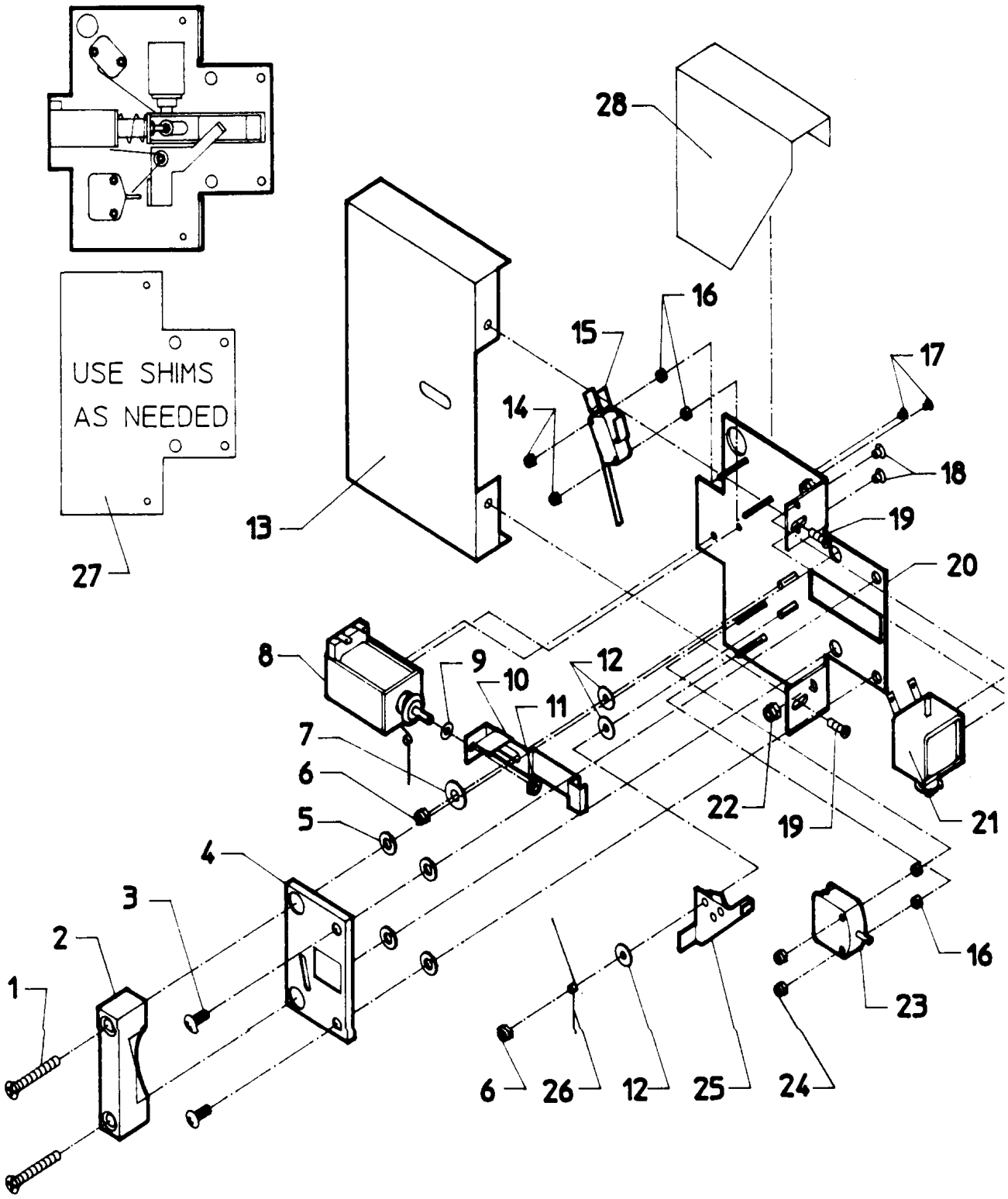

721134

Section: DOOR SAFETY INTERLOCK - COIN MODELS

No.	Part No.	Description	Series Qty
-	24001641	DOOR LOCK COMPLETE (PC 110V)	1
1	24001642	SCREW, S.S. (1/4-20 X 1 1/2")	1
-	24001640	DOOR LOCK COMPLETE (MC 110V)	1
2	24001483	CATCH, DOOR LOCK	1
3	24001323	SCREW (1/4-20 X 1/2")	2
4	24001484	COVER, DOOR LOCK PLATE	1
5	24001295	LOCKWASHER	2
6	24001342	NUT, LOCK (8-32)	2
7	24001485	WASHER, SHOULDER (TEFLON)	1
8	24001101	SOLENOID, DOOR REL (110/220V)	1
9	24001358	WASHER, FLAT (#10)	1
10	24001250	BUTTON, PUSH (STOP)	1
11	24001481	NUT, FIBERLOCK PLTD (#10-32)	1
12	24001480	WASHER, TEFLON (#8)	3
13	24001487	COVER, DOOR LOCK ASSY.	1
14	24001476	NUT, FIBERLOCK (#4-40)	2
15	24001229	SWITCH, DOOR LOCK	1
16	24001477	SPACER, NYLON (#6)	4
17	24001643	SCREW, S.S. (6 X 3/16")	2
18	24001479	SCREW, S.S. (#8-32 X 3/16)	2
19	24001301	SCREW (8-18 X 3/8")	2
20 N	24001644	DOOR LOCK PLATE	1
21	24001102	SOLENOID, DOOR LCK (110/220V)	1
22	24001305	NUT, FIBERLOCK (1/4)	2
23	24001255	SWITCH, DOOR HANDLE	1
24	24001736	PIN, LOCKING	2
25	24001230	LEVER, DOOR LOCK	1
26	24001293	SPRING, TORSION	1
28	24001488	SHIELD, SPLASH (DOOR LOCK)	1

*Color Code (-)=Not Shown #=Series, Serial Prefix or Run No., N=Not Available

Section: CONTROL MODULE

Model: MAF18PC2

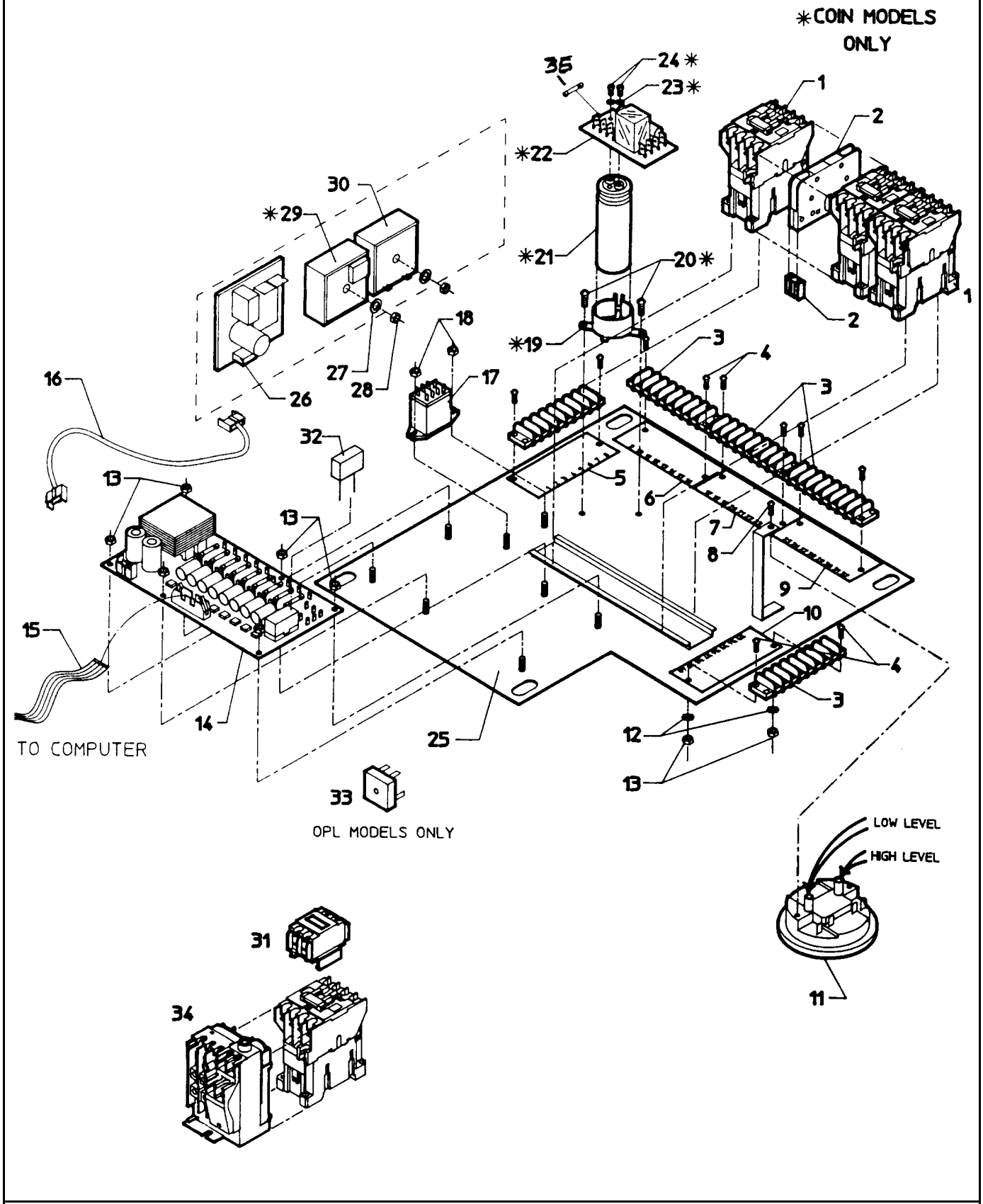

721205

Section: CONTROL MODULE

No.		Part No.	Description	Series Qty
1		24001105	CONTACTOR (120V)	3
2		24001108	INTERLOCK, MECH,CONTACTOR Note: INTERLOCK, MECH. CONTACTOR	1
3		24001412	TERMINAL STRIP	5
4		24001414	SCREW, S.S. (#6-32 X 1/2 PLTD)	10
5	N	24001026	DECAL,INSUL. TERM STRIP (1-8)	1
6	N	24001027	DECAL,INSUL.TERM STRIP (9-16)	1
7	N	24001028	DECAL,INSUL.TERM STRIP (17-24)	1
8		24001411	SCREW, S.S. (6-32 X 3/8 PLTD)	1
9	N	24001029	DECAL,INSUL.TERM STRIP (25-32)	1
10		24001030	DECAL,INSUL.TERM STIRP (33-40)	1
11		24001222	SWITCH, TRI LEVEL----N	1
12		24001415	WASHER, S.S. (#6 EXT. TOOTH)	10
13		24001417	NUT, BRASS (#6-32)	16
14		24001244	FUSE (.500MA)	1
14		24001246	FUSE, (.125 MA)	1
14		24001181	BOARD KIT (FUSE/COIN)	1
15		24001590	CABLE, 16-OIN RIBBON (6 IN.)	1
16		24001410	HARNESS, BATTERY BACK-UP	1
17		24001177	FLANGE KIT, RELAY (110V)	1
18		24001417	NUT, BRASS (#6-32)	2
19		------	NOT REQUIRED PART OR SEE NOTE Note: PART NUMBER NOT AVAILABLE	1
20		24001578	SCREW, S.S. (6-32 X 1/4")	2
21		24001247	CAPACITOR, DOOR LOCK	1
22		24001248	PC BOARD, DOOR LOCK	1
23		24001579	WASHER, S.S. (#10 LOCK EXT.)	2
24		24001580	SCREW, S.S. (#10-32 X 3/8")	2
25		24001587	PANEL, ELECTRICAL (4 CYC)	1
26		24001243	BOARD, BATTERY BCKUP	1
27		24001295	LOCKWASHER	2
28		24001419	NUT, PLTD (1/4-#20 HEX)	2
29		24001176	RELAY, TIME OFF DELAY	1
30		24001418	RELAY, TIME DELAY (120V 30SEC)	1
31		24001752	RELAY, TIME DELAY	1
32		24001109	FILTER, RC-NTWK.	1
33		24001753	BRIDGE, RECTIFIER (10AMP 600V)	1
34		------	NOT REQUIRED PART OR SEE NOTE Note: PART NOT USED	1
35		------	NOT REQUIRED PART OR SEE NOTE Note: PART NOT USED	1

*Color Code (-)=Not Shown #=Series, Serial Prefix or Run No., N=Not Available

Model: MAF18PC2

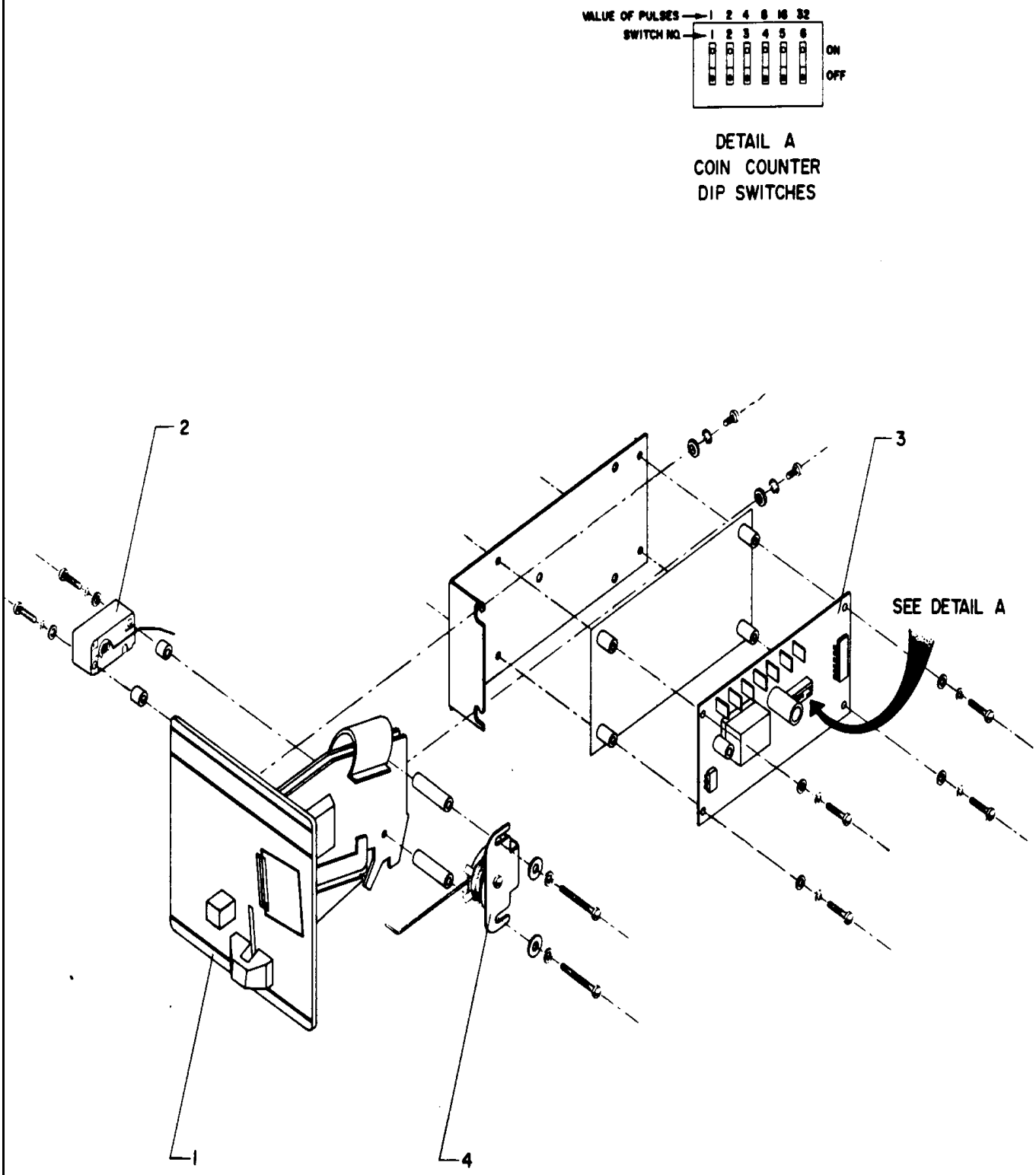

721136

Section: COIN METER & COIN BOX

No.		Part No.	Description	Series	Qty
1		24001615	COIN ACCEPTOR (US QUARTER)		1
2	N	24001616	COIN SWITCH		1
3		24001617	ELECTRONIC COIN COUNTER W/HAR Note: COUNTER BOARD, COIN		1
4		24001756	SOLENOID, COIN BLOCKING		1
4		24001618	COIN BLOCKING SOLENOID (110V)		1

*Color Code (-)=Not Shown #=Series, Serial Prefix or Run No., N=Not Available

Model: MAF18PC2

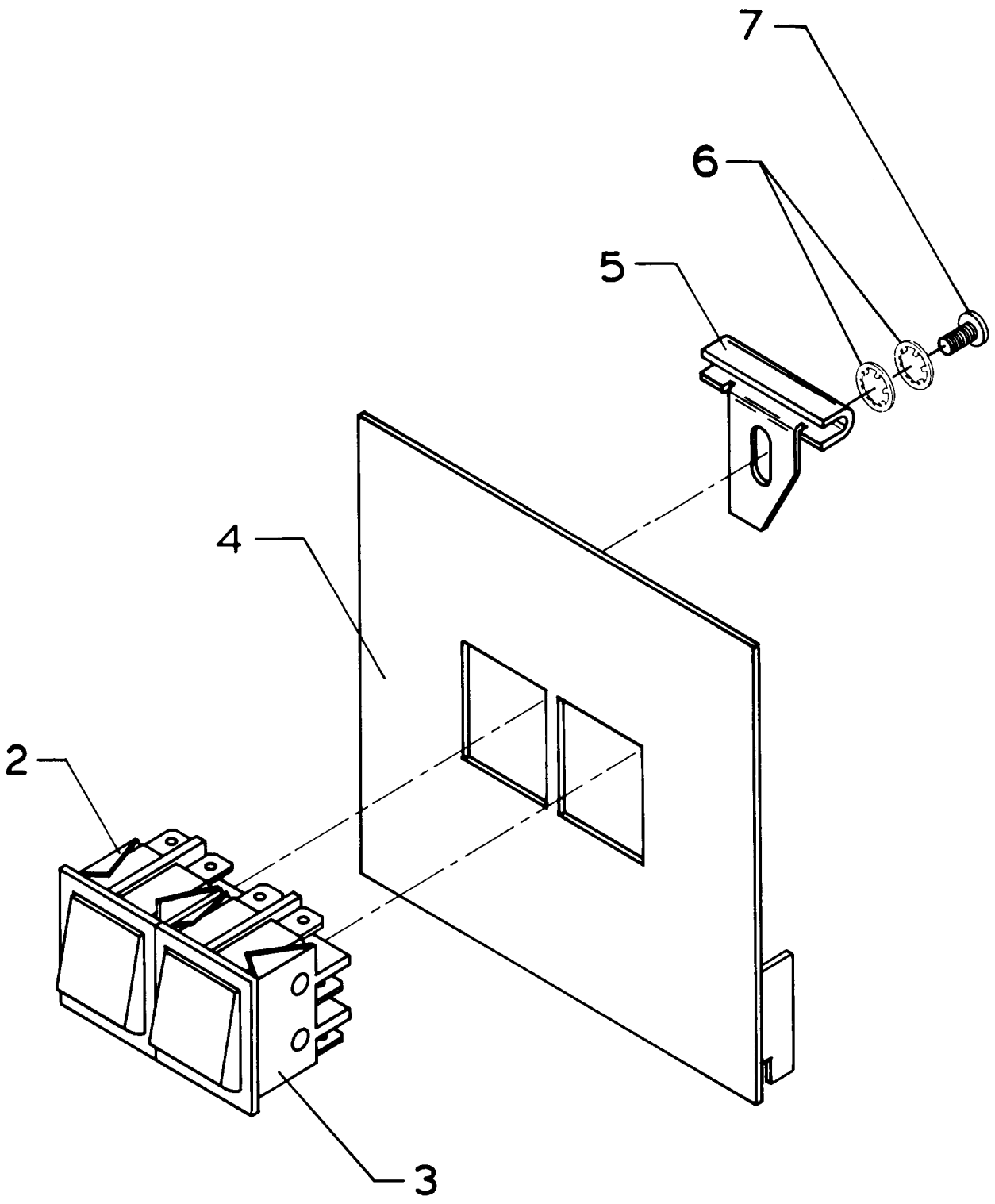

721141

Section: MANUAL START/STOP CONTROL

No.		Part No.	Description	Series Qty
1		24001764	KIT, START/STOP COMPLETE	1
2		24001251	SWITCH, ROCKER (RED)	1
3		24001252	SWITCH, MOMENTARY	1
4	N	24001206	COVER, PLATE (OPL)	1
5		------	NOT REQUIRED PART OR SEE NOTE Note: PART NUMBER NOT AVAILABLE	0
6		------	NOT REQUIRED PART OR SEE NOTE Note: PART NUMBER NOT AVAILABLE	0
7		------	NOT REQUIRED PART OR SEE NOTE Note: PART NUMBER NOT AVAILABLE	0

*Color Code (-)=Not Shown #=Series, Serial Prefix or Run No., N=Not Available

Model: MAF18PC2

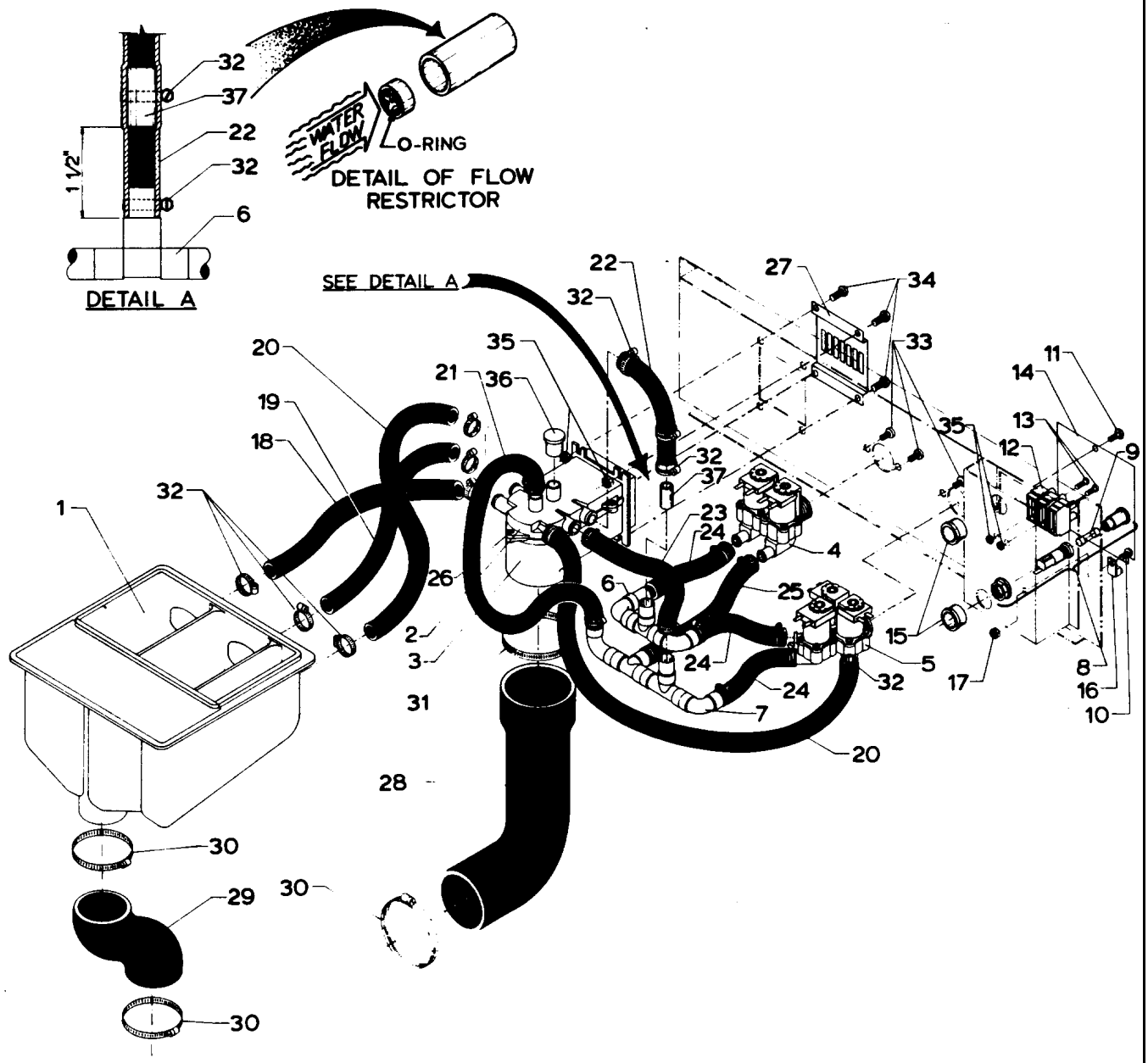

721143

Section: SOAP DISPENSER

No.	Part No.	Description	Series Qty
1	24001627	DISPENSER, SUPPLY (COIN)	1
2	24001031	BREAKER, VAC. (TOP)	1
3	24001032	BREAKER, VAC. (BTM)	1
4	24001117	VALVE (2WAY 110-127V/50-60HZ)	1
5	24001118	VALVE (3WAY 110-127V/50-60HZ)	1
6	24001765	MANIFOLD, SUPPLY	1
7	24001766	MANIFOLD, FILL	1
8	24001433	HOLDER, FUSE	1
9	24001225	FUSE, CONTROL (2AMP)	1
10	24001432	SCREW, S.S. (#8-32 X 3/8)	1
11	24001301	SCREW (8-18 X 3/8")	1
12	24001629	BLOCK, INPUT POWER (3 WIRE)	1
13	24001430	SCREW, S.S (6-32 X 1)	2
14	24001429	COVER, JUNCTION BOX	1
15	24001436	GROMMET, BUSHING	2
16	24001434	CONNECTOR, GROUND	1
17	24001342	NUT, LOCK (8-32)	1
18	24001767	HOSE	1
19	24001768	HOSE	1
20	24001769	HOSE	2
21	24001770	HOSE	1
22	24001771	HOSE	1
23	24001772	HOSE	1
24	24001773	HOSE	3
25 N	24001774	HOSE	1
26	24001432	SCREW, S.S. (#8-32 X 3/8)	5
27	24001426	COVER, VACUUM BREAKER	1
28	24001552	HOSE, VACUUM BREAKER	1
29	24001442	HOSE, SOAP DISPENSER	1
30	24001353	CLAMP, HOSE (#40)	3
31	24001282	CLAMP, HOSE (#48)	1
32	24001423	CLAMP, HOSE (#8)	23
33	24001357	SCREW	4
34	24001414	SCREW, S.S. (#6-32 X 1/2 PLTD)	4
35	24001425	NUT, FIBERLOCK, PLTD (6-32)	6
36	24001424	CAP, PLUG (YELLOW)	1
37	24001775	FLOW RESTRICTOR ASSY.	1

*Color Code (-)=Not Shown #=Series, Serial Prefix or Run No., N=Not Available

Model: MAF18PC2

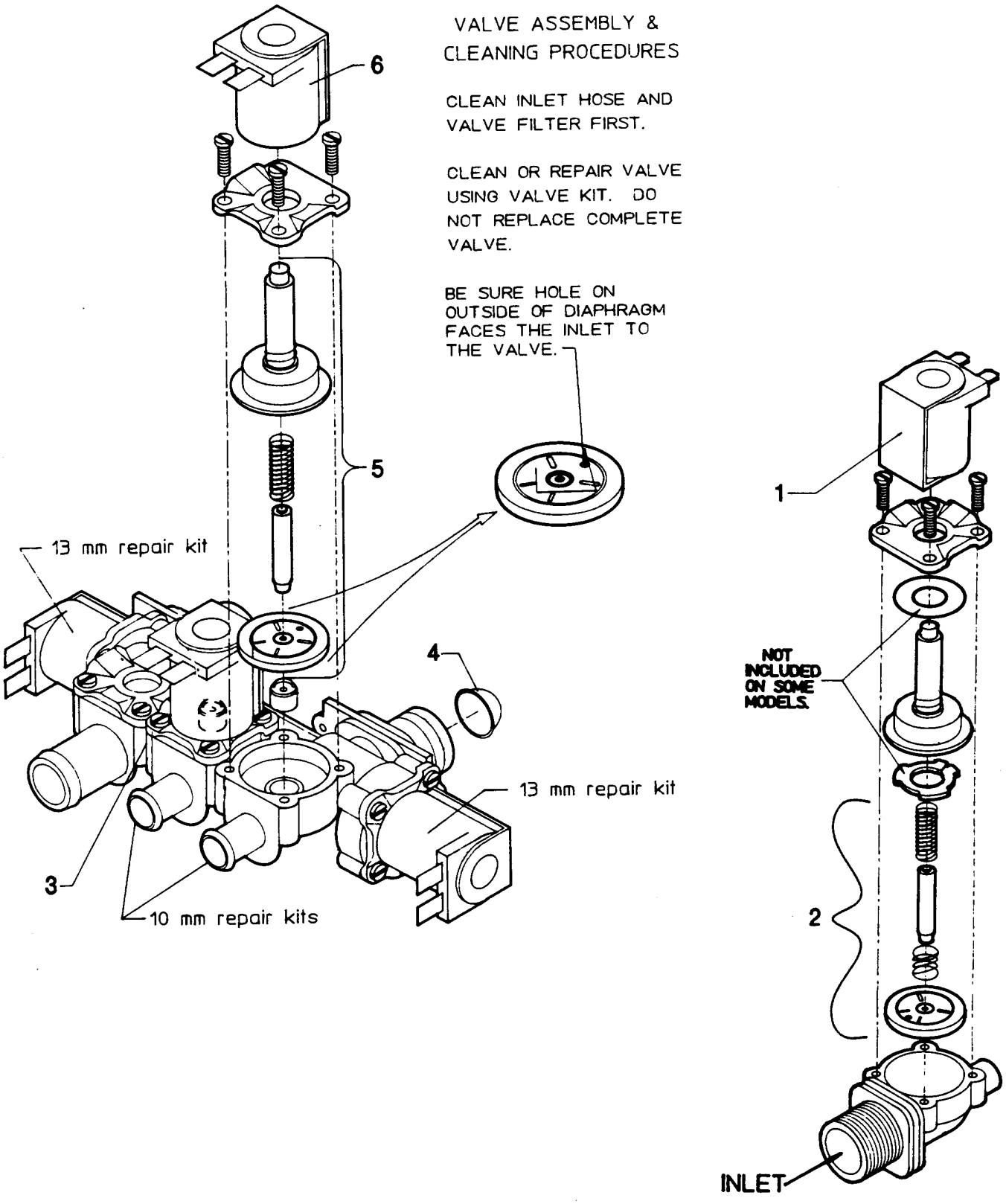

721357

Section: WATER VALVE

No.	Part No.	Description	Series Qty
-	24001118	VALVE (3WAY 110-127V/50-60HZ)	1
1	24001232	COIL, WATER VALVE	1
-	24001776	VALVE, WATER (2 WAY)	1
2	24001121	KIT, VALVE REPAIR (10MM)	1
-	24001634	SCREEN, VALVE	2
3	24001226	VALVE, MIXING (3 WAY)	1
4	24001634	SCREEN, VALVE	2
5	24001231	KIT, DIAPHRAM (SHORT)	2
5	24001122	KIT, VALVE REPAIR (13MM)	2
6	24001232	COIL, WATER VALVE	1

*Color Code (-)=Not Shown #=Series, Serial Prefix or Run No., N=Not Available

Section: MAIN EXPLOYDED VIEW - SUB ASSEMBLY

Model: MAF18PC2

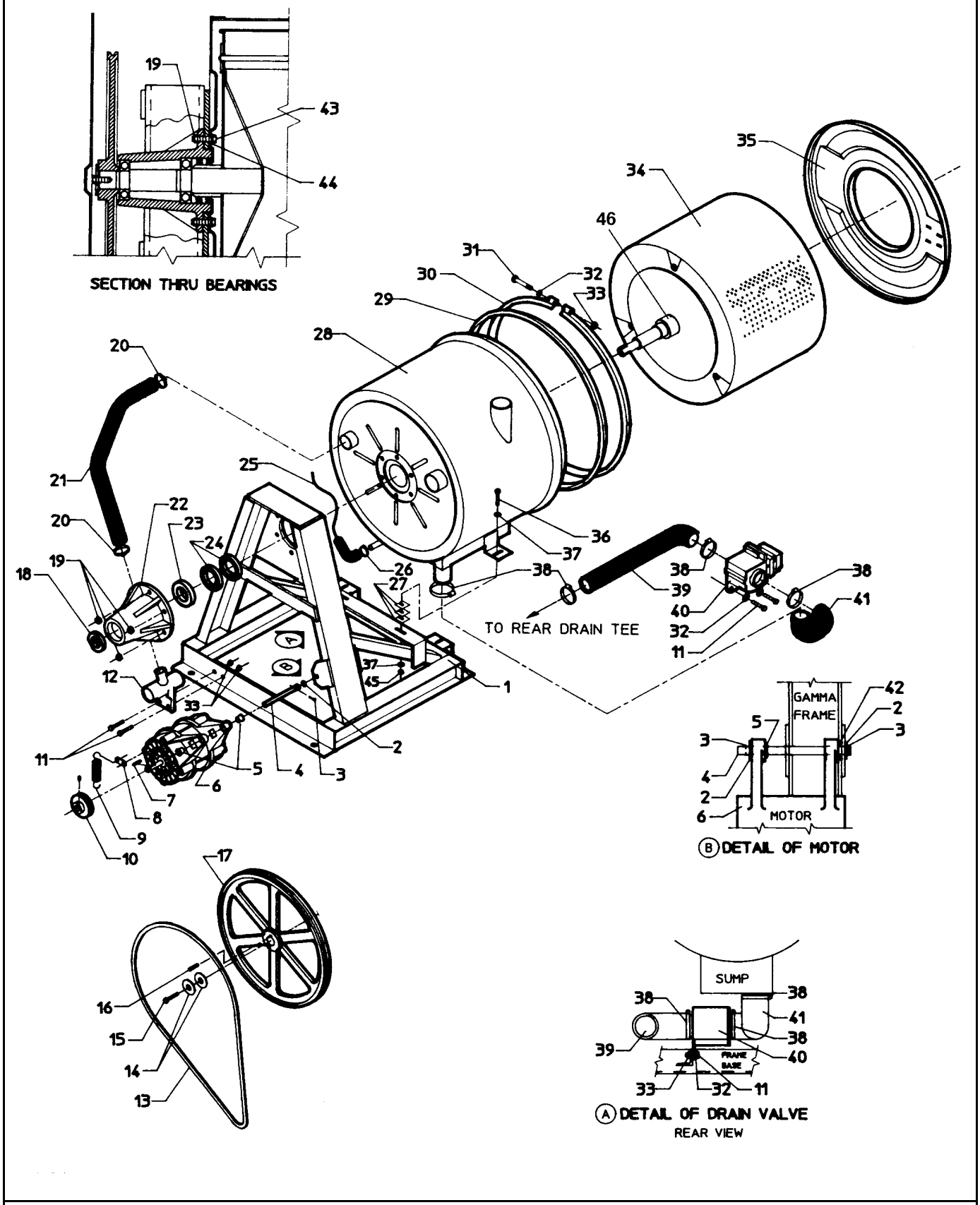

721129

Section: MAIN EXPLOYDED VIEW - SUB ASSEMBLY

No.	Part No.	Description	Series Qty
1	24001369	KIT ASSY., FRAME (2 SPEED)	1
2	24001511	WASHER, HARDENED (PLTD. 5/8)	2
3	24001512	PIN, COTTER PLTD. (1/8X1 1/2)	2
4	24001647	ROD, MOTOR SUPPORT	1
5	24001021	BUSHING, MOTOR (UC/UW)	2
6	24001082	MOTOR,2SP (208/240/60/3)	1
6	24001078	MOTOR,2SP (120/60/1/)	1
7	24001648	KEY (MOTOR 3/16" X 1 1/2")	1
8	24001651	CLIP, MOTOR SPRING	1
9	24001650	SPRING (BELT TENSION)	1
10	24001086	PULLEY, MOTOR	1
11	24001502	SCREW (1/4"-20 X 3/4")	4
12	24001826	CONNECTION, TEE-DRAIN	1
13	24001093	BELT, V (3V-710)	1
14	24001501	WASHER, S.S.	2
15	24001500	SCREW, S.S. (3/8"-16X1)	1
16	24001499	KEY (3/8" X 1 1/4")	1
17	24001085	PULLEY, BASKET	1
18	24001015	BEARING (6207 2RS C3)	1
19	24001515	NUT, FIBERLOCK PLTD. (3/8-16)	6
20	24001283	CLAMP, HOSE (#28)	2
21	24001662	HOSE, OVERFLOW	1
22	24001258	KIT, TRUNNION (2SP.)	1
23	24001014	BEARING (6208 2RS C3)	1
24	24001019	SEAL, SHAFT (SS SPR60X80X10MM)	2
25	24001661	AIR TRAP	1
26	24001438	CLAMP, HOSE (#10)	1
27	24001803	SHIM, SHELL	3
28	24001375	KIT, SHIELD RETRO	1
29	24001184	GASKET KIT (FRONT SHELL)	1
30	24001388	KIT, BAND SHELL	1
31	24001215	KIT, BAND FASTENER	1
32	24001215	KIT, BAND FASTENER	1
33	24001215	KIT, BAND FASTENER	1
34	24001266	BASKET (18-2 SPEED)	1
35	24001384	KIT, FRONT SHELL	1
36	24001657	BOLT (S.S. 3/8-16 X 1 1/2")	2
37	24001516	WASHER, FLAT PLTD. (3/8")	4
38	24001353	CLAMP, HOSE (#40)	4
39	24001660	HOSE, DRAIN (REAR)	1
40	24001116	VALVE, DRAIN (2" 110V,60HZ)	1
41	24001565	HOSE, DRAIN (FRONT)	1
42	24001805	TRIM, FRONT PANEL	1
43	24001659	BOLT (S.S. 1/2"-13 X2)	6
44	24001808	WASHER, S.S.	3
-	24001258	KIT, TRUNNION (2SP.)	1
45	24001515	NUT, FIBERLOCK PLTD. (3/8-16)	2
46	24001130	SLEEVE, SFT (2SP)	1

*Color Code (-)=Not Shown #=Series, Serial Prefix or Run No., N=Not Available

Model: MAF18PC2

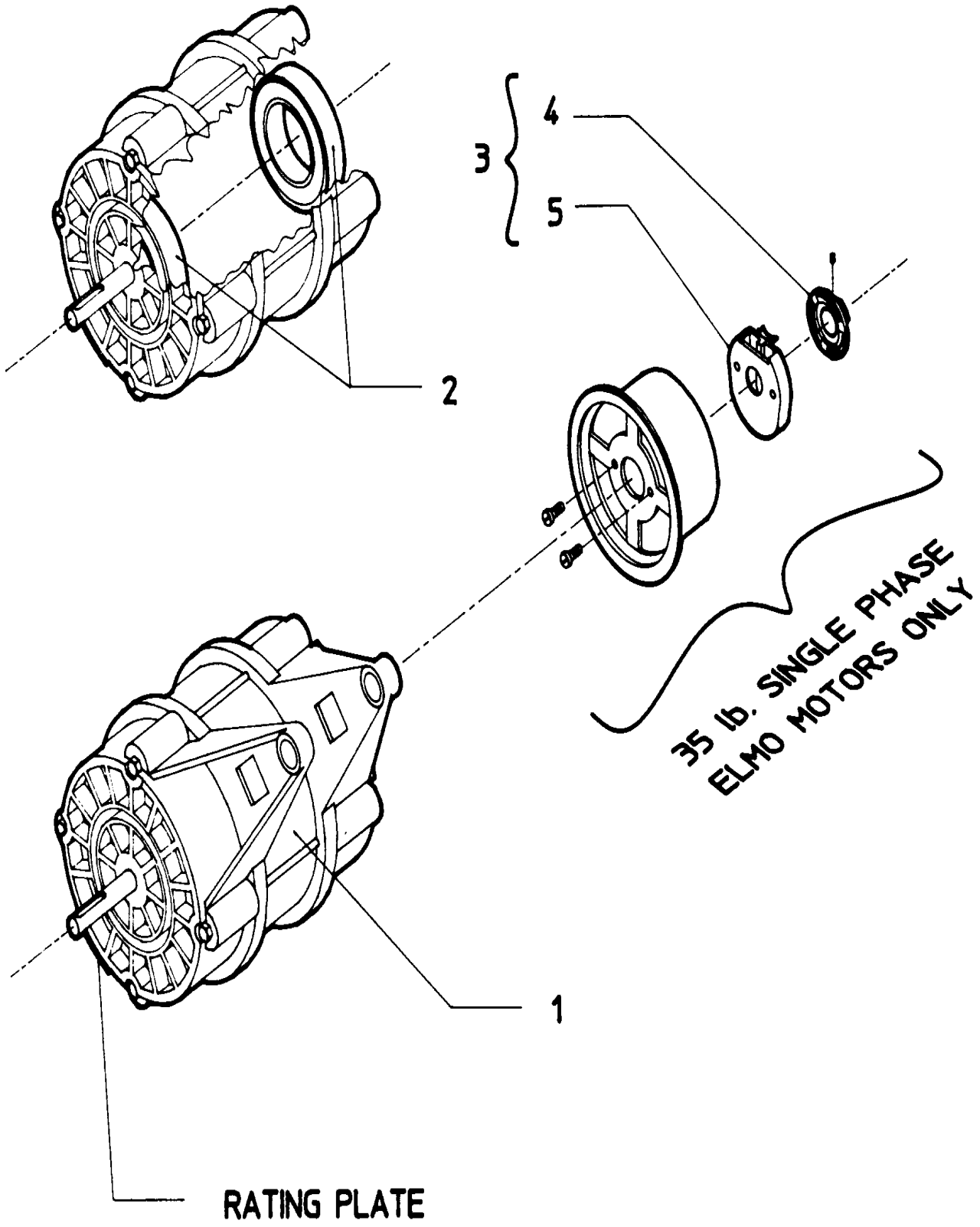

721140

Section: MOTOR

No.	Part No.	Description	Series Qty
1	24001078	MOTOR,2SP (120/60/1/)	1
1	24001082	MOTOR,2SP (208/240/60/3)	1
2	24001018	BEARING, 6204-2RS	2
3	------	NOT REQUIRED PART OR SEE NOTE Note: PART NOT USED	0
4	------	NOT REQUIRED PART OR SEE NOTE Note: PART NUMBER NOT AVAILABLE	0
5	------	NOT REQUIRED PART OR SEE NOTE Note: PART NUMBER NOT AVAILABLE	0

*Color Code (-)=Not Shown #=Series, Serial Prefix or Run No., N=Not Available

Model: MAF18PC2

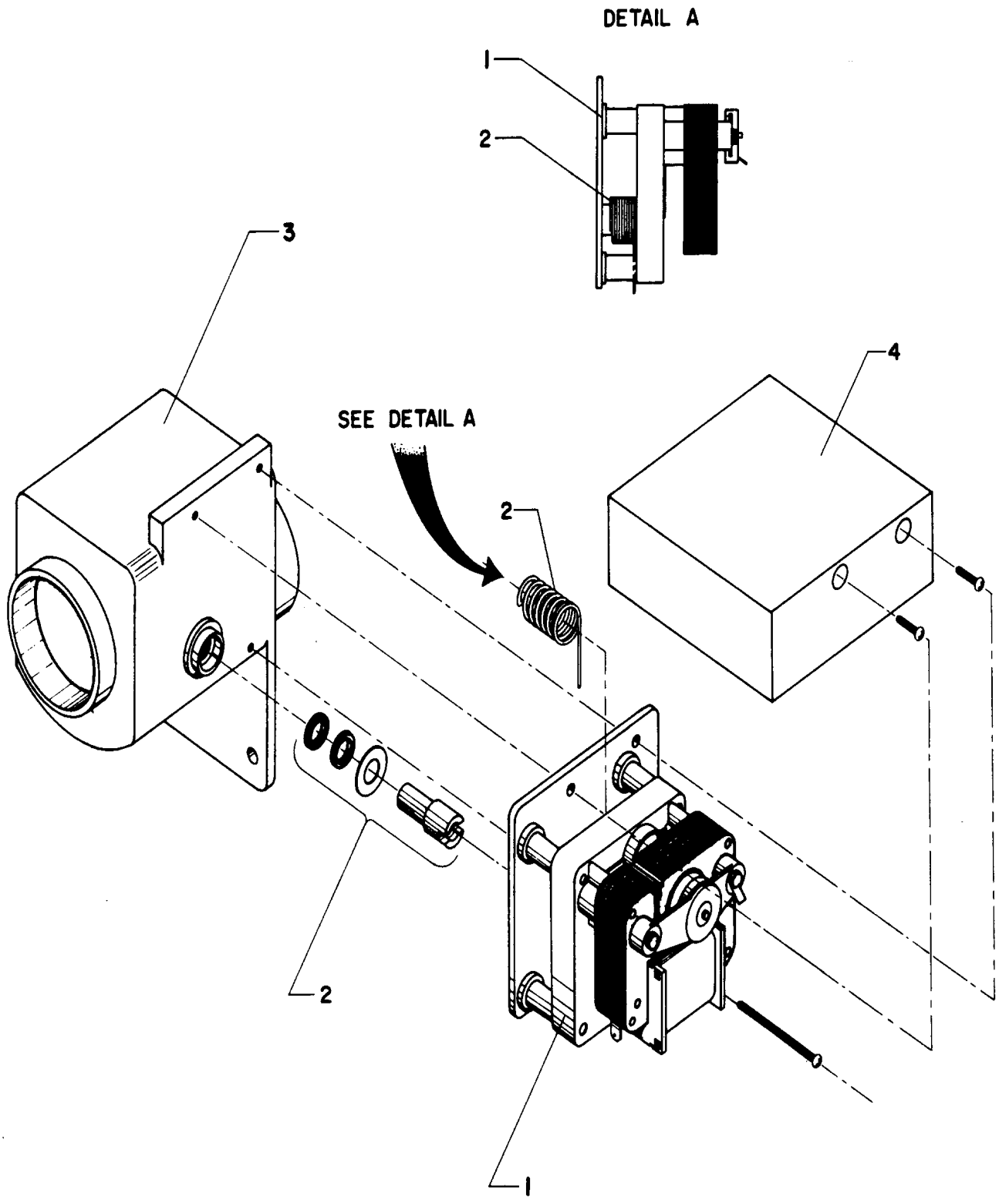

721135

Section: DRAIN VALVE

No.	Part No.	Description	Series Qty
1	24001530	VALVE, MOTOR DRAIN (110V 60HZ)	1
-	24001116	VALVE, DRAIN (2" 110V,60HZ)	1
2	24001528	MAIN DRIVE SHAFT AND SEAL KIT	1
3	24001570	VALVE BODY	1
4	24001571	COVER, DRAIN VALVE MOTOR	1

*Color Code (-)=Not Shown #=Series, Serial Prefix or Run No., N=Not Available